The subject matter shown and described in this drawing and any other information advanced in connection therewith is to be held in strict confidence. All rights to any designs, inventions, trademarks, and copyrights disclosed are reserved to Dreison International Inc.

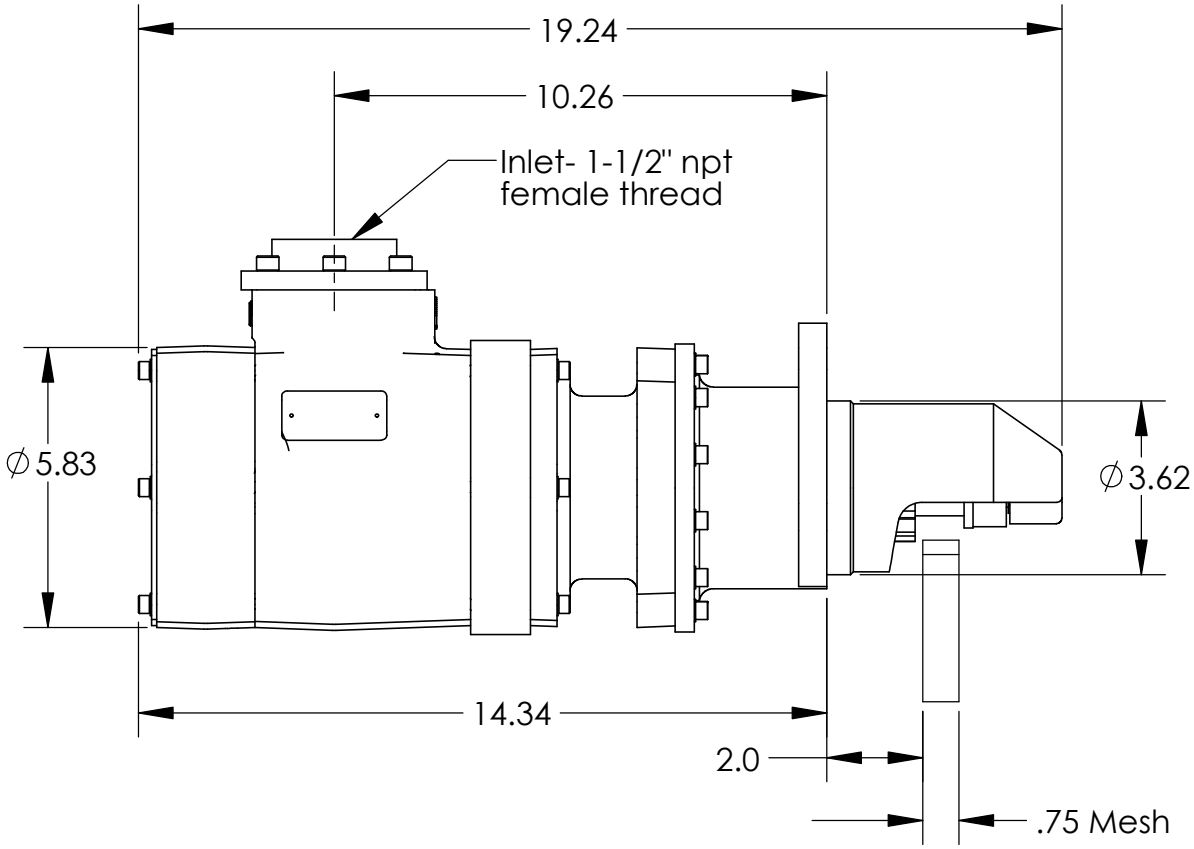

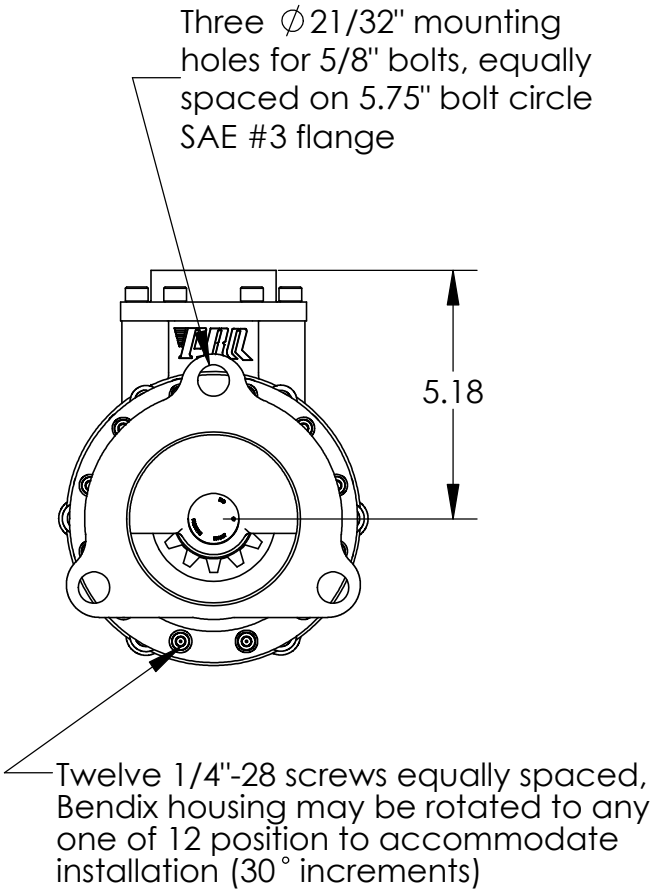

N/A

FINISH: N/A

THIRD ANGLE PROJECTION

INTERPRET IN ACCORDANCE WITH ANSI Y14.5M-1982

STD TOLERANCES (UNLESS OTHERWISE NOTED)

Fractional	Decimal	Angular
±1/32	.XX± 0.010	±1°
	.XXX± 0.005	

WHOLE NUMBERS & 1 PLACE DECIMALS ARE REFERENCE DIMENSIONS ONLY

DIMENSIONS IN INCHES [mm] | DO NOT SCALE

MARADYNE
POW-R-QUIK
Cleveland, Ohio

TITLE: PRQ200I TURBINE STARTER

SIZE	FSCM NO.	DWG. NO.	REV
A	ODBY7	40000	A

Created- 6-9-11			
PROJ- 55EX004	Author - RDINGESS	APPROVED	SCALE 1:4
REF -	Checked - PDE		SHEET SHEET 1 OF 1

REV	DATE	DESCRIPTION	ZONE	ECN